# 1 Comp. Loc. Comfort

## 1.1 Power Seats

Seat Pan Assembly Overview

4 - Seat Pan Lower Frame

7 - Driver Seat Height Adjustment Motor -V245- or Front Passenger Seat Height Adjustment Motor -V246-

- ❑ Driver Seat Height Adjustment Motor -V245- integrated with Driver Seat Height Adjustment Sensor -G231- from MY 2006

8 - Seat Forward/Back Adjustment Motor -V288-

9 - Driver Seat Angle Adjustment Motor -V243- or Front Passenger Seat Angle Adjustment Motor -V244-

- ❑ Driver Seat Angle Adjustment Motor -V243- integrated with Driver Seat Tilt Adjustment Sensor -G232- from MY 2006

Protected by c
permitted unle
with respec

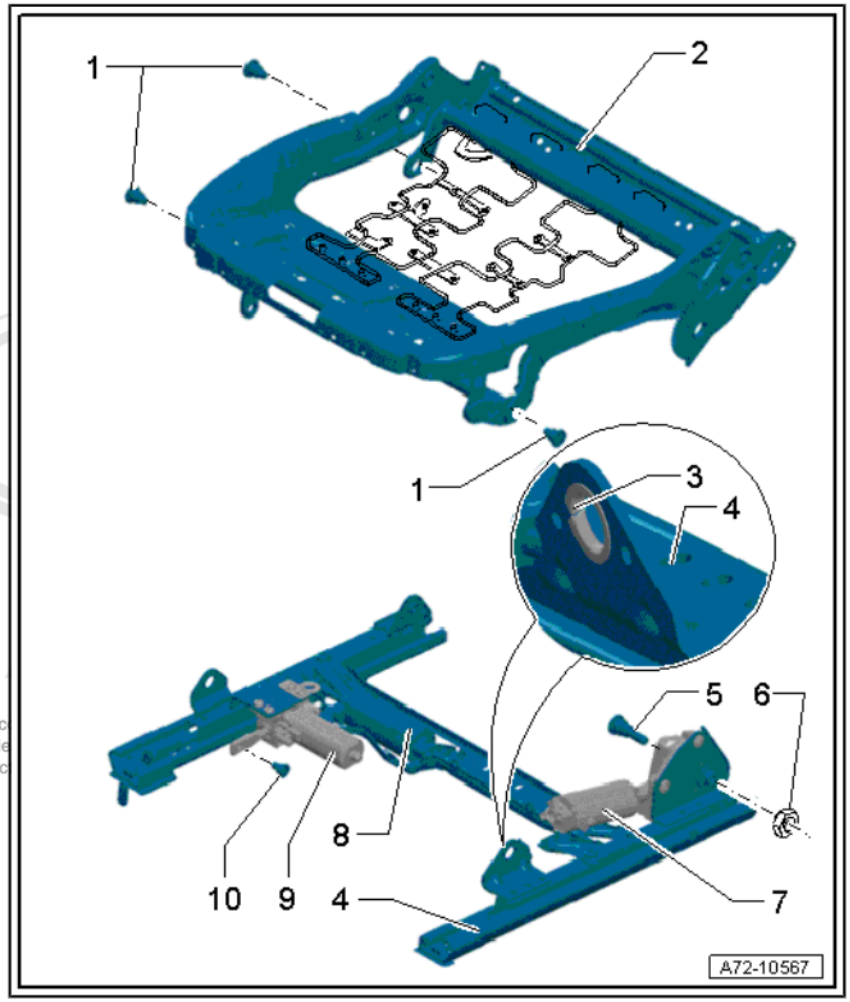

## 1.2 Heated Seats

Seat Heating Element - Front Standard Seat

1 - Driver Seat Heating Element -Z6- / Front Passenger Seat Heating Element -Z8-

The following are integrated in the front heated seat system:

- Heated Driver Seat Temperature Sensor -G59-
- Driver Seat Side Bolster Heater -Z31-
- Driver Seat Side Bolster Heater 2 -Z40-
- Front Passenger Heated Seat Temperature Sensor -G60-
- Front Passenger Seat Side Bolster Heater -Z33-
- Front Passenger Seat Side Bolster Heater 2 -Z41-

Protected by copyright. Copying for private or commercial purposes, in part or in w
permitted unless authorised by AUDI AG. AUDI AG does not guarantee or accept
with respect to the correctness of information in this document. Copyright by AU

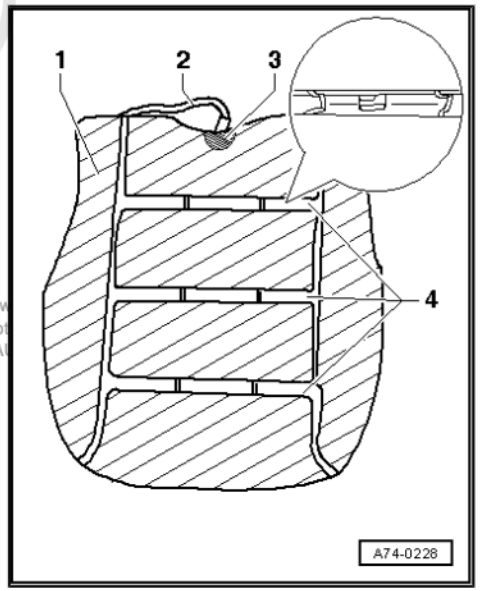

Front Backrest Heating Element

1 - Driver Backrest Heating Element -Z7- / Front Passenger Backrest Heating Element -Z9-

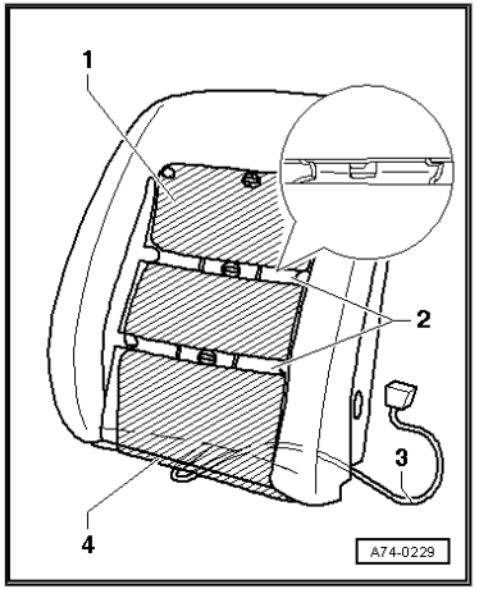


Protected by copyright. Copying for private or commercial purposes, in part or in whole, is not permitted unless authorised by AUDI AG. AUDI AG does not guarantee or accept any liability with respect to the correctness of information in this document. Copyright by AUDI AG.

## 1.3 Automatic Headlamp Range Control Component Overview

1 - Headlamp beam adjustment motors
- ❑ Left Headlamp Beam Adjustment Motor -V48-
- ❑ Right Headlamp Beam Adjustment Motor -V49-

2 - Headlamp Range Control Module -J431-
- ❑ Located behind the glove box at instrument panel support

3 - Left Rear Level Control System Sensor -G76-
- ❑ Located at the left rear suspension link

4 - Left Front Level Control System Sensor -G78-
- ❑ Located at the left front track control link

Protected by copyright. Copying for private or commercial purposes, in part or in
permitted unless authorised by AUDI AG. AUDI AG does not guarantee or acce
with respect to the correctness of information in this document. Copyright by

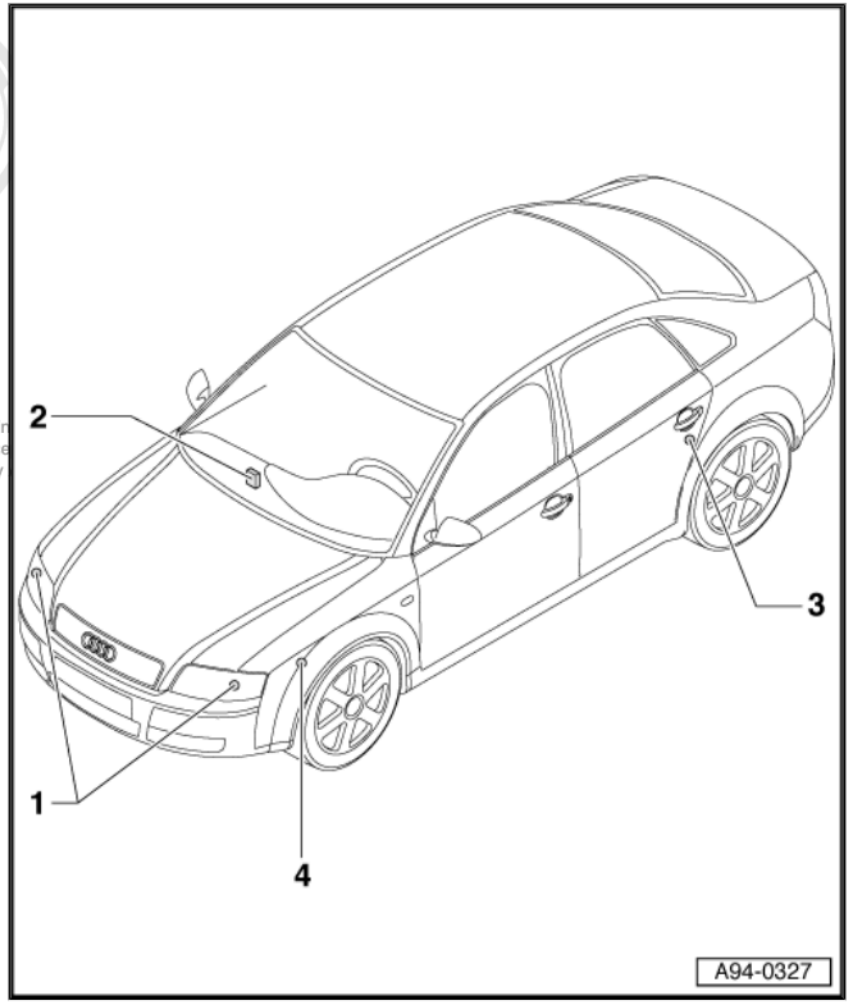


## 1.4 Garage Door Opener

Garage Door Opener Control Module - through 10.04

1 - Garage Door Opener Control Module -J530-

– Located in the front bumper cover

– Garage Door Opener Control Module - from 11.04 location
⇒ page 5

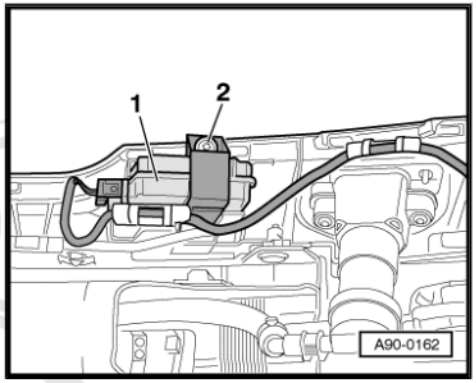


Garage Door Opener Control Module - from 11.04

2 - Garage Door Opener Control Module -J530-

– Located in the front bumper cover

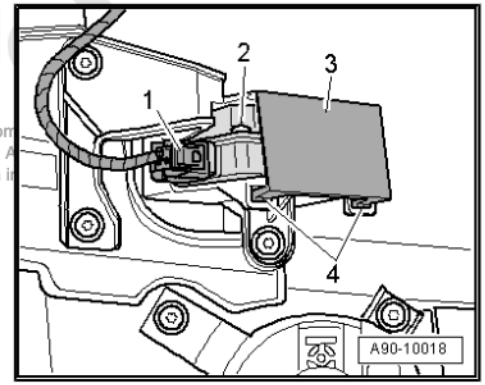


Protected by copyright. Copying for private or com
permitted unless authorised by AUDI AG. AUDI A
with respect to the correctness of information i